HS-1

July 22, 2020

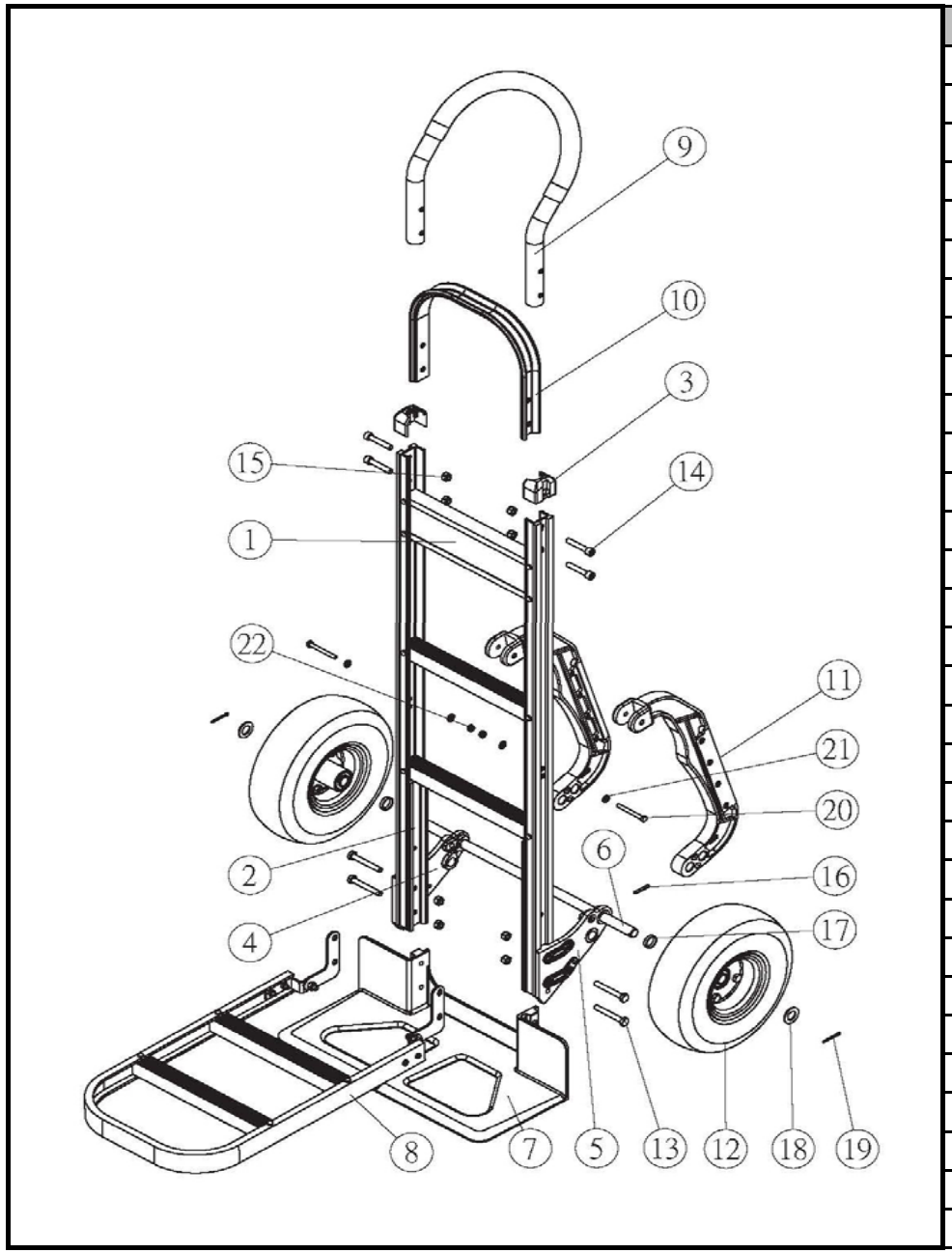

NO	PART NAME	DESCRIPTION	Q'TY
1	HS-01-P090A	Frame	1
2	HS-03-P004	Reinforcer	2
3	HS-15-P033R	Plastic end cap (red)	2
4	HS-01-P036R-N	Axle box-right	1
5	HS-01-P036L-N	Axle box-left	1
6	HS-01-P035A-TW	Axle 460 mm	1
7	M2Y/HS-01-P041	W18" x D7.5" nose plate	1
8	C2Y/HS-01-P034	Extension plate	1
9	C1G/HS-01-P045R	Continue handle	1
10	HS-03-P052-1	Handle extension 227 mm	1
11	HS-01-P053R	Stair climber with red plastic	1 (set)
12	CW/W-007-4P	10" EVA wheel+precise bearing	2
13	ED-000860	Screw M8*60	4
14	ED-010840-1	Screw M8*40	4
15	NN-08	Nut M8	8
16	PP-0430	Spring pin	2
17	WA-001604	Sleeve 4 mm	2
18	WA-1602	Washer M16 x 2 mm	2
19	SP-3.225	Cotter pin	2
20	ED-000655	Screw M6*55	2
21	WA-0602	Washer M6 x 2 mm	4
22	NN-06	Nut M6	2